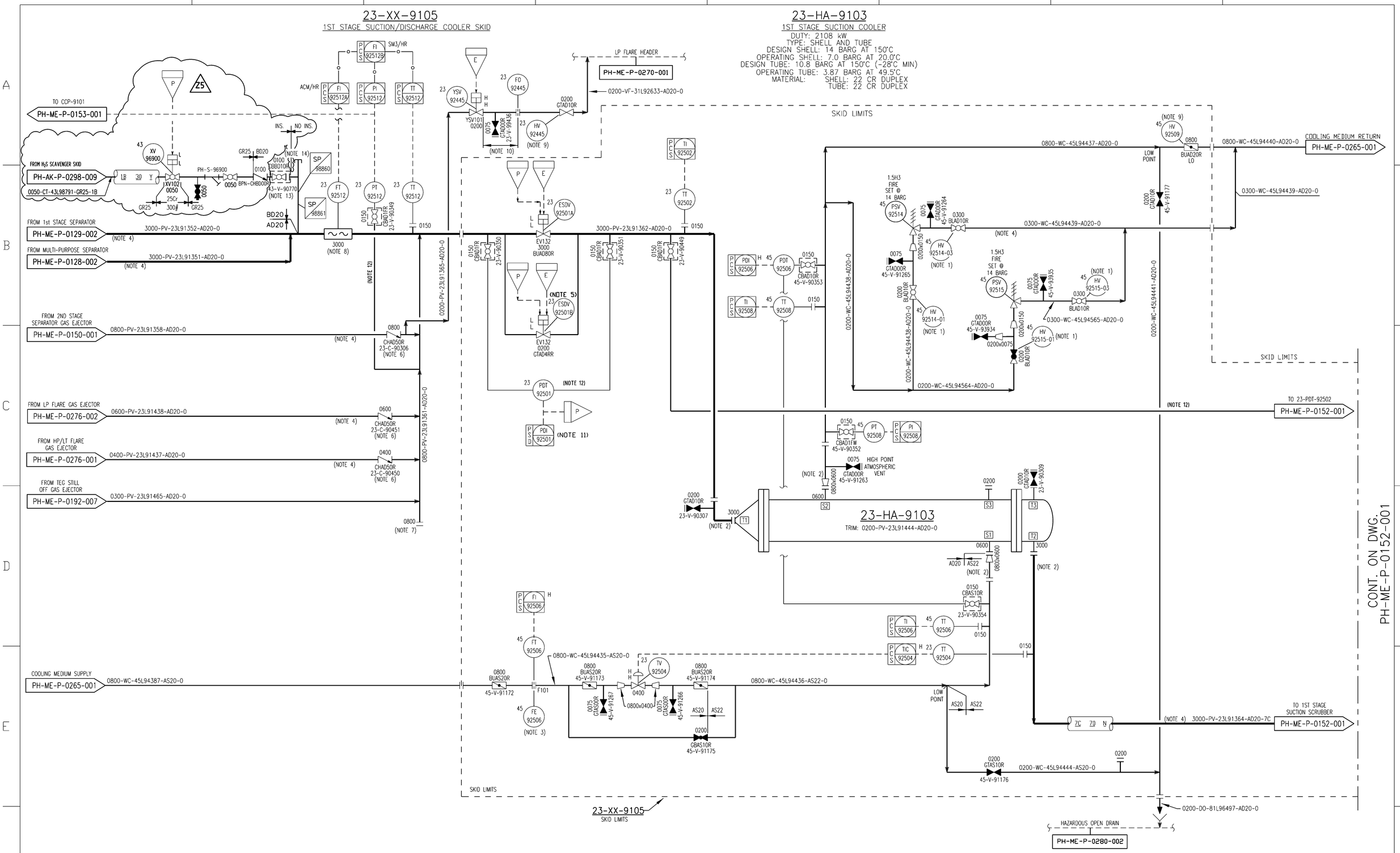

NOTES:
1. KEY INTERLOCKED VALVE.
2. REMOVABLE MAINTENANCE SPOOL.
3. CONDITIONING PLATE. PROVIDE STRAIGHT RUN OF 2D UPSTREAM AND 2D DOWNSTREAM.
4. DO NOT POCKET.
5. 2" EQUALIZATION VALVE PARALLEL TO ESDV VALVE.
6. ANTI-SLAM DESIGN.
7. FOR FUTURE RECOMPRESSOR CONNECTION.
8. GAS ULTRASONIC METER. PROVIDED STRAIGHT RUN OF 7D UPSTREAM AND 3D DOWNSTREAM.
9. KEY LOCKED VALVE.
10. MINIMUM ONE METER SEPARATION.
11. PERMISSIVE TO OPEN LARGE ESDV VALVE ON LOW DIFFERENTIAL.
12. INSTRUMENT LINES ARE HEAT TRACED.
13. INJECTION QUILL (SP-S-98861), ACCESS FITTING (SP-S-98860)
14. ATTACHMENT POINT FOR QUILL RETRIEVAL TOOL.

Z5

REV	DATE	BY	DESCRIPTION	CHK	ENGR	APPR	CLIENT
Z5	20.02.17		AS BUILT, AFA-004732				
Z4	28.06.16		AS BUILT, AFA-004732				
Z3	06.04.16		AS BUILT, MW-33788				
Z2	28.01.15		AS BUILT, AFA V-4426				
Z1	04.07.14		AS BUILT, MW-19671				
Z	26.06.13		AS BUILT				

Wood Group Engineering (North Sea) Ltd.
MUSTANG INTERNATIONAL, LP
HOUSTON, TEXAS
PROJECT NO. 10910

bp

VALHALL
RE-DEVELOPMENT PROJECT
PIPING & INSTRUMENT DIAGRAM
1ST STAGE SUCTION COOLER

REGISTRATION CODES			DRAWING NO.					SCALE
AREA	SYSTEM	TYPE	FACILITY CODE	ORIG	DISP	SEQ No.	SHEET	NONE
T33-02	23	XB	PH	ME	P	0151	001	REV Z5

Field for file specification:
Field for date and time :
A1